HUAWEI TECHNOLOGIES CO., LTD.
Huawei Industrial Base, Bantian Longgang
Shenzhen 518129, P.R. China
Tel: 400-822-9999
Solar.Huawei.com

The text and figures reflect the current technical state at the time of printing. Subject to technical changes. Errors and omissions excepted. Huawei assumes no liability for mistakes or printing errors. For more information, please visit solar.huawei.com. Version NO.01-(202406)

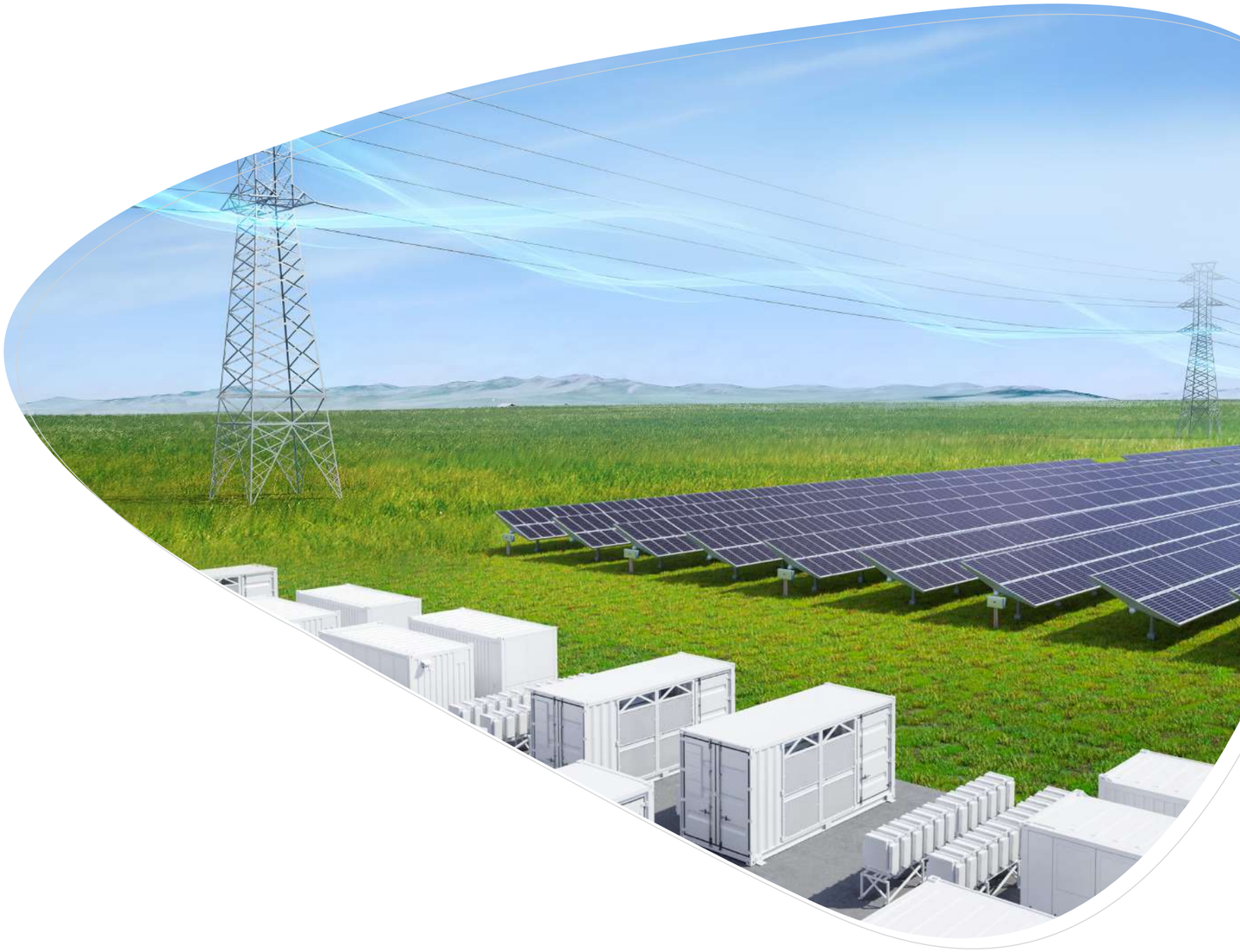

Fusionsolar
Utility Smart PV & ESS Solution

HUAWEI

About Huawei

Huawei is a leading global provider of information and communications technology (ICT) infrastructure and smart devices. With integrated solutions across four key domains – telecom networks, IT, smart devices, and cloud services – we are committed to bringing digital to every person, home and organization for a fully connected, intelligent world. Huawei's end-to-end portfolio of products, solutions and services are both competitive and secure. Through open collaboration with ecosystem partners, we create lasting value for our customers, working to empower people, enrich home life, and inspire innovation in organizations of all shapes and sizes. At Huawei, innovation focuses on customer needs. We invest heavily in basic research, concentrating on technological breakthroughs that drive the world forward.

Employees
207,000+

Employees Work in R&D
55%

Countries and Regions
170+

Interbrand Best Global Brands
92nd

in Global R&D Investment
NO.5

Boston Consulting Group Most Innovative Companies
8th

Smart PV & ESS Solution

Optimal Investment | Grid Supporting | Smart O&M | Safe & Reliable

Low Voltage AC Coupling Solution

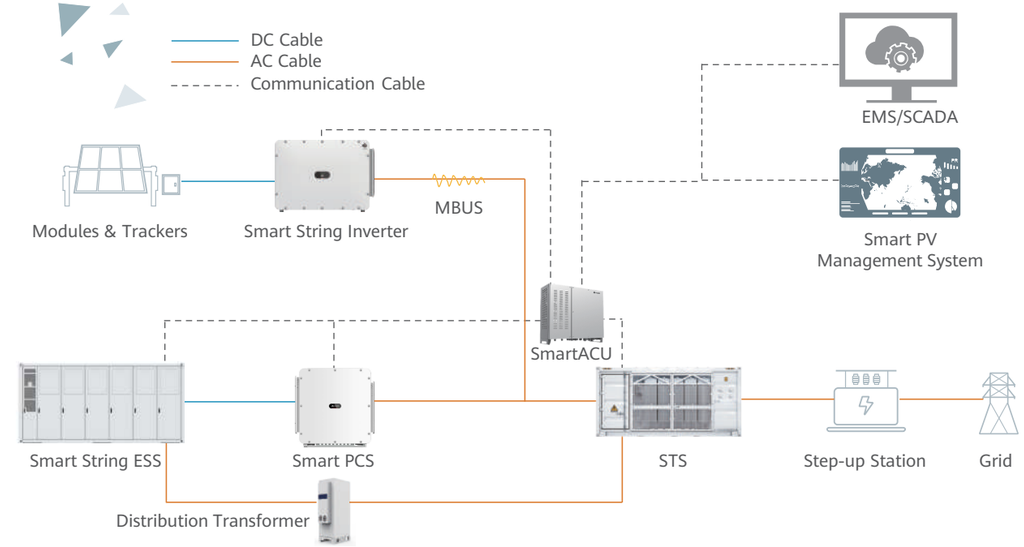

Medium Voltage AC Coupling Solution (Grid forming)

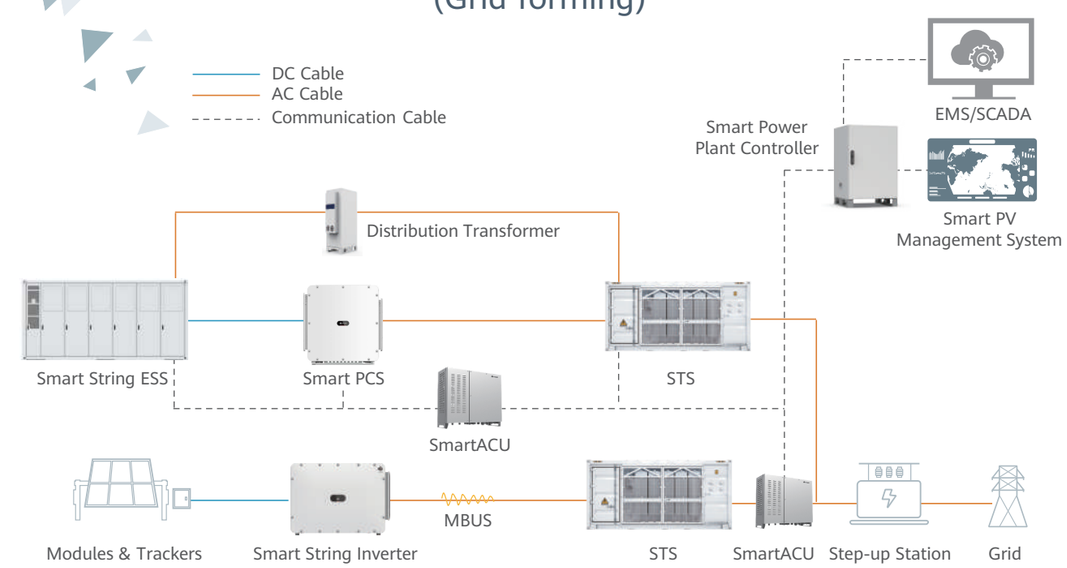

SUN2000-330KTL-H1

Smart String Inverter

For APAC, LATAM & EUROPE

Max. Efficiency ≥ 99.0% | **Smart Connector-level Detection (SCLD)** | **Smart Self-cleaning Fan (SSCF)** | **IP66 Protection** | **MBUS Supported** | **Smart String-level Disconnection (SSLD)** | **Smart IV Curve Diagnosis Supported** | **Surge Arresters for DC & AC**

Efficiency Curve

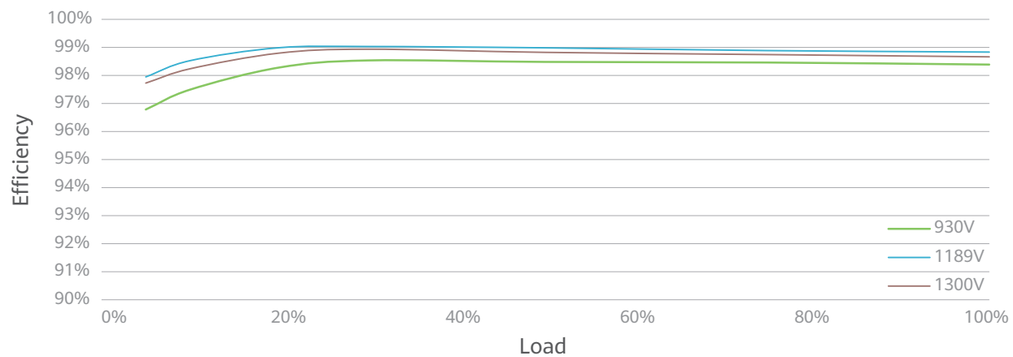

Circuit Diagram

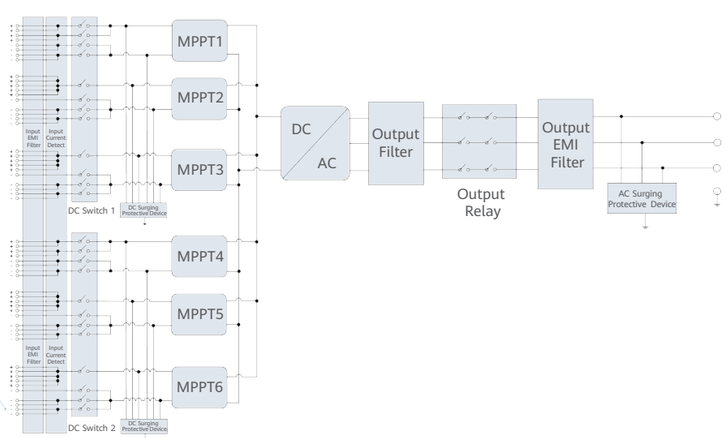

Technical Specifications

Efficiency	
Max. Efficiency	> 99.03%
European Efficiency	> 98.8%
Input	
Max. Input Voltage	1,500 V
Number of MPPT	6
Max. Current per MPPT	65 A
Max. Short Circuit Current per MPPT	115 A
Max. PV Inputs per MPPT	4/5/5/4/5/5
Start Voltage	550 V
MPPT Operating Voltage Range	500 V ~ 1,500 V
Nominal Input Voltage	1,080 V
Output	
Nominal AC Active Power	300,000 W
Max. AC Apparent Power	330,000 VA
Max. AC Active Power (cosϕ=1)	330,000 W
Nominal Output Voltage	800 V, 3W + PE
Rated AC Grid Frequency	50 Hz / 60 Hz
Nominal Output Current	216.6 A
Max. Output Current	238.2 A
Adjustable Power Factor Range	0.8 LG ... 0.8 LD
Total Harmonic Distortion	THD_i < 1% (Rated)
Protection	
Smart String-level Disconnection (SSLD)	Yes
Smart Connector-level Detection (SCLD)	Yes
AC Overcurrent Protection	Yes
DC Reverse-polarity Protection	Yes
PV-array String Fault Detection	Yes
DC Surge Arrester	Type II
AC Surge Arrester	Type II
DC Insulation Resistance Detection	Yes
Residual Current Detection Unit	Yes
Communication	
Display	LED Indicators, WLAN + APP
USB	Yes
MBUS	Yes
RS485	Yes
General	
Dimensions (W x H x D)	1,048 x 753 x 395 mm
Weight (with mounting plate)	≤ 112 kg
Operating Temperature Range	-25°C ~ 60°C
Cooling Method	Smart Air Cooling
Max. Operating Altitude without Derating	4,000 m
Relative Humidity	0 ~ 100% (Non-condensing)
DC Connector	HH4SMM4TMSPA / HH4SFM4TMSPA
AC Connector	Support OT / DT Terminal (Max. 400 mm^2)
Protection Degree	IP 66
Anti-corrosion Protection	C5-Medium
Topology	Transformerless
Standards Compliance	
IEC 62109-1/-2, IEC 62920, IEC 60947-2, EN 50549-2, IEC 61683, etc.	

SUN2000-330KTL-H2

Smart String Inverter

For MEA, Eurasian

Max. Efficiency ≥ 99.0% | **Smart Connector-level Detection (SCLD)** | **Smart Self-cleaning Fan (SSCF)** | **IP66 Protection** | **MBUS Supported** | **Smart String-level Disconnection (SSLD)** | **Smart IV Curve Diagnosis Supported** | **Surge Arresters for DC & AC**

Efficiency Curve

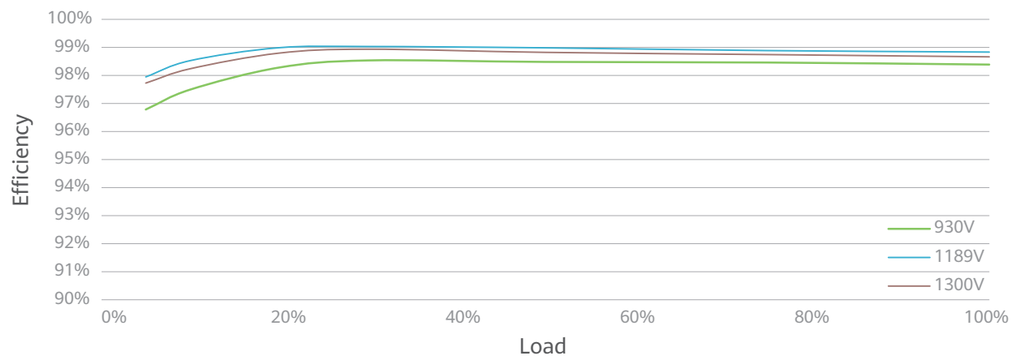

Circuit Diagram

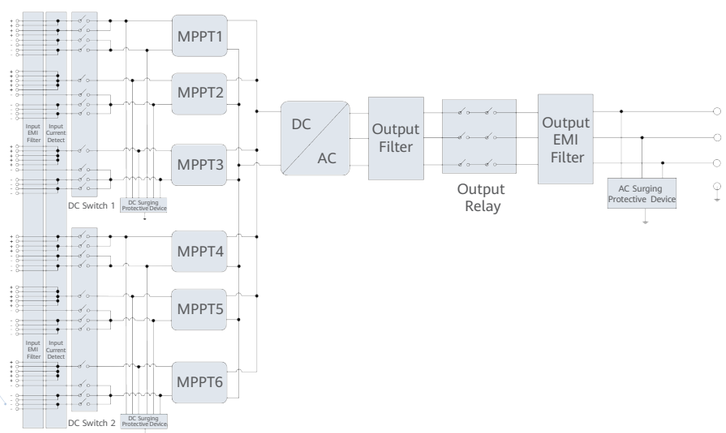

Technical Specifications

Efficiency	
Max. Efficiency	> 99.0%
European Efficiency	> 98.8%
Input	
Max. Input Voltage	1,500 V
Number of MPPT	6
Max. Current per MPPT	65 A
Max. Short Circuit Current per MPPT	115 A
Max. PV Inputs per MPPT	4/5/5/4/5/5
Start Voltage	550 V
MPPT Operating Voltage Range	500 V ~ 1,500 V
Nominal Input Voltage	1,080 V
Output	
Nominal AC Active Power	275,000 W[1]
Max. AC Apparent Power	330,000 VA
Max. AC Active Power (cosϕ=1)	330,000 W
Nominal Output Voltage	800 V, 3W + PE
Rated AC Grid Frequency	50 Hz / 60 Hz
Nominal Output Current	198.5 A
Max. Output Current	240.3 A
Adjustable Power Factor Range	0.8 LG ... 0.8 LD
Total Harmonic Distortion	THD_i < 1% (Rated)
Protection	
Smart String-level Disconnection (SSLD)	Yes
Smart Connector-level Detection (SCLD)	Yes
AC Overcurrent Protection	Yes
DC Reverse-polarity Protection	Yes
PV-array String Fault Detection	Yes
DC Surge Arrester	Type II
AC Surge Arrester	Type II
DC Insulation Resistance Detection	Yes
Residual Current Detection Unit	Yes
Communication	
Display	LED Indicators, WLAN + APP
USB	Yes
MBUS	Yes
RS485	Yes
General	
Dimensions (W x H x D)	1,048 x 753 x 395 mm
Weight (with mounting plate)	≤ 112 kg
Operating Temperature Range	-25°C ~ 60°C
Cooling Method	Smart Air Cooling
Max. Operating Altitude without Derating	4,000 m
Relative Humidity	0 ~ 100% (Non-condensing)
DC Connector	HH4SMM4TMSPA / HH4SFM4TMSPA
AC Connector	Support OT / DT Terminal (Max. 400 mm^2)
Protection Degree	IP 66
Anti-corrosion Protection	C5-Medium
Topology	Transformerless
Standards Compliance	
IEC 62109-1/-2, IEC 62920, IEC 60947-2, EN 50549-2, IEC 61683, etc.	

1: Environmental temperature is 50°C

SUN2000-215KTL-H0
Smart String Inverter

9 MPPTs | **Max. Efficiency ≥99.0%** | **Smart String-level Disconnection** | **Smart I-V Curve Diagnosis Supported** | **MBUS Supported** | **Fuse Free Design** | **Surge Arresters for DC & AC** | **IP66 Protection**

Efficiency Curve

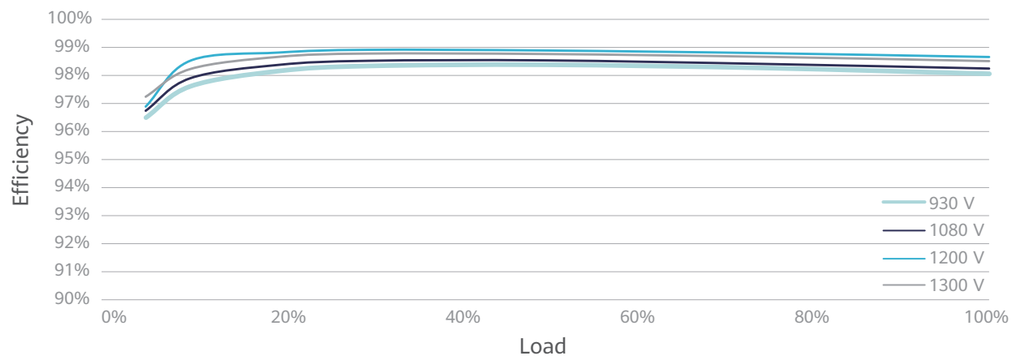

Circuit Diagram

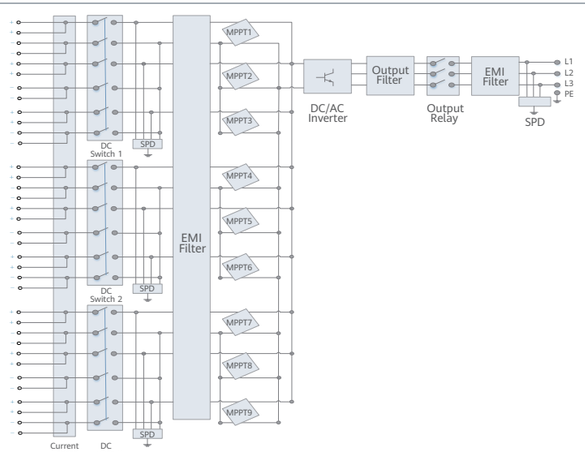

Technical Specifications

Efficiency	
Max. Efficiency	99.00%
European Efficiency	98.80%
Input	
Max. Input Voltage	1,500 V
Max. Current per MPPT	30 A
Max. Short Circuit Current per MPPT	50 A
Start Voltage	550 V
MPPT Operating Voltage Range	500 V ~ 1,500 V
Nominal Input Voltage	1,080 V
Number of Inputs	18
Number of MPPT	9
Output	
Nominal AC Active Power	200,000 W
Max. AC Apparent Power	215,000 VA
Max. AC Active Power (cosϕ=1)	215,000 W
Nominal Output Voltage	800 V, 3W + PE
Rated AC Grid Frequency	50 Hz / 60 Hz
Nominal Output Current	144.4 A
Max. Output Current	155.2 A
Adjustable Power Factor Range	0.8 LG ... 0.8 LD
Total Harmonic Distortion	THD_i < 1% (Rated)
Protection	
Smart String-level Disconnection (SSLD)	Yes
AC Overcurrent Protection	Yes
DC Reverse-polarity Protection	Yes
PV-array String Fault Detection	Yes
DC Surge Arrester	Type II
AC Surge Arrester	Type II
DC Insulation Resistance Detection	Yes
Residual Current Detection Unit	Yes
Communication	
Display	LED Indicators, WLAN + APP
USB	Yes
MBUS	Yes
RS485	Yes
General	
Dimensions (W x H x D)	1,035 x 700 x 365 mm
Weight (with mounting plate)	≤ 86 kg
Operating Temperature Range	-25°C ~ 60°C
Cooling Method	Smart Air Cooling
Max. Operating Altitude without Derating	4,000 m
Relative Humidity	0 ~ 100% (Non-condensing)
DC Connector	MC4 EVO2
AC Connector	Support OT / DT Terminal
Protection Degree	IP66
Anti-corrosion Protection	C5-Medium
Topology	Transformerless
Standards Compliance	
IEC 62109-1/-2, IEC 62920, EN 50549-2, EN 50530, etc.	

JUPITER-3000K-H1-GF
Smart Transformer Station
For EUROPE

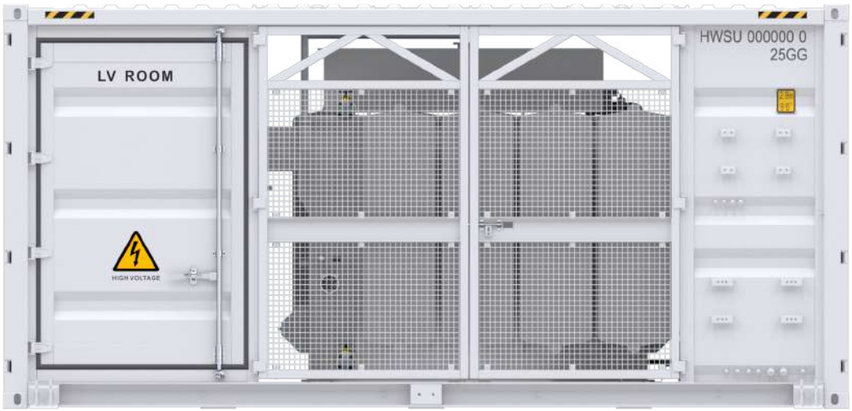

Simple

Prefabricated and pre-tested,
no Internal cabling needed onsite
Compact 20’ HC container design for easy transportation

Efficient

High efficiency transformer for higher yields
Lower self-consumption for higher yields

Smart

Real-time detection of transformer,
LV panel and RMU high precision sensor
of LV electricity parameters
Remote control of ACB and MV circuit breaker

Reliable

Robust design against harsh environments optimal cooling
Design for high availability and easy O&M
Comprehensive tests from components, device to solution

Schematic Diagram

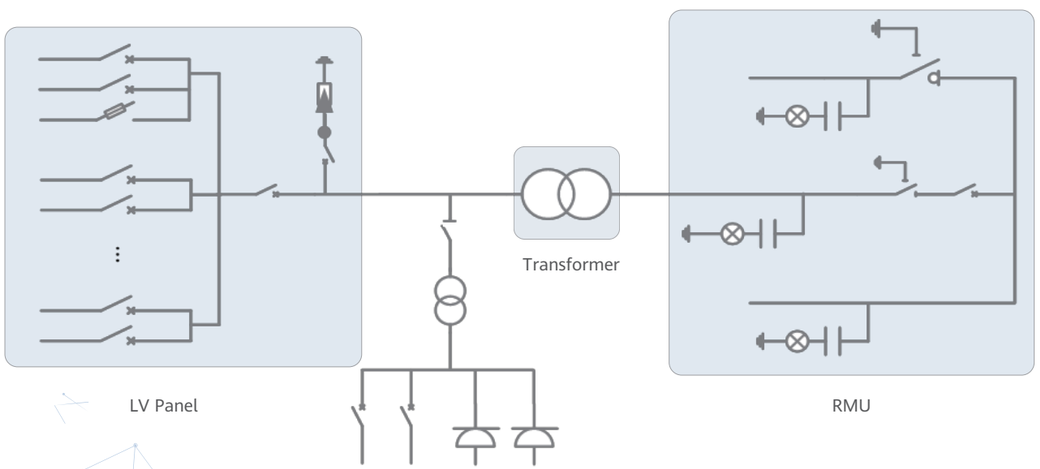

Technical Specifications

Input	
Available Inverters / PCS	LUNA2000-200KTL-H1
Maximum LV AC Inputs	37
AC Power	3,300 kVA @40°C/ 3,025 kVA @50°C [1]
Rated Input Voltage	800 V
LV Panel Segregation	Form 2b
LV Main Switches	ACB (2,900 A / 800 V / 3P, 1 x 1 pcs)
LV Main Switches for LUNA2000-200KTL-H1	MCCB (250 A / 800 V / 3P, 2 x 18 pcs)
LV Main Switches for DTS-200K-D0	MCCB (250 A / 800 V / 3P, 1 x 1 pcs)
Output	
Rated Output Voltage	30 kV, 33 kV, 35 kV [2]
Frequency	50 Hz
Transformer Type	Oil-immersed, Conservator Type
Transformer Cooling Type	ONAN
Transformer Tappings	±2 x 2.5%
Transformer Oil Type	Mineral Oil (PCB Free)
Transformer Vector Group	Dy11
Transformer Min. Peak Efficiency Index	Tier 1 or Tier 2 In Accordance with EN 50588-1
RMU Type	SF_6 Gas Insulated
RMU Transformer Protection Unit	MV Vacuum Circuit Breaker Unit
RMU Cable Incoming / Outgoing Unit	Direct Cable Unit or Cable Load Break Switch Unit
Auxiliary Transformer	Dry Type Transformer, 5 kVA, Single-phase, li0
Output Voltage of Auxiliary Transformer	230 /127Vac
Protection	
Transformer Monitoring & Protection	Oil Level, Oil Temperature, Oil Pressure and Buchholz
Protection Degree of MV & LV Room	IP 54
MV Internal Arcing Fault Classification of STS	IAC AFLR 20 kA 1s
MV Arc Releasing	MV Upward Arc Releasing for Higher Safety
MV Relay Protection	50/51, 50N/51N
LV Overvoltage Protection	Type I+II
Anti-corrosion Protection	C5
Features	
2 kVA UPS	Optional [3]
MV Surge Arrester for Transformer	Optional [3]
General	
Dimensions (W x H x D)	6,058 x 2,896 x 2,438 mm (20’ HC Container)
Weight	< 23 t
Operating Temperature Range	-25°C~ 60°C [4] (-13°F ~ 140°F)
Relative Humidity	0% ~ 95%
Max. Operating Altitude	1,000 m [5]
MV-LV AC Connections	Prewired and Pretested, No Internal Cabling Onsite
LV & MV Room Cooling	Smart Cooling without Air-across for Higher Availability
Communication	Modbus TCP, Preconfigured with SmartACU
Applicable Standards	IEC 62271-202, EN 50588-1, IEC 60076, IEC 62271-200, IEC 61439-1

1 -More detailed AC power of STS, please refer to the de-rating curve.
2 -Rated output voltage from 10 kV to 35 kV, more available upon request
3 -Extra expense needed for optional features which standard product doesn’t contain, more options upon request.
4 -When ambient temperature ≥55°C, awning shall be equipped for STS on site by customer.
5 -For higher operating altitude, please consult with Huawei.

JUPITER-9000K/6000K/3000K-H1
Smart Transformer Station

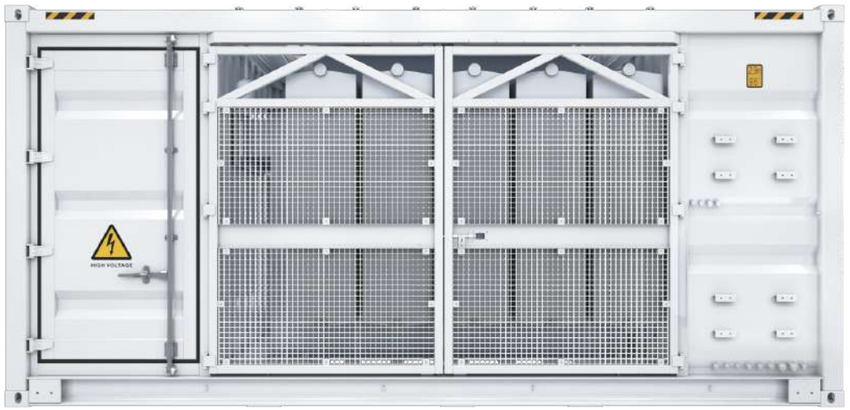

Simple

Prefabricated and pre-tested,
no Internal cabling needed onsite
Compact 20' HC container design for easy transportation

Efficient

High efficiency transformer for higher yields
Lower self-consumption for higher yields

Smart

Real-time detection of transformer,
LV panel and RMU high precision sensor
of LV electricity parameters
Remote control of ACB and MV circuit breaker

Reliable

Robust design against harsh environments optimal cooling
Design for high availability and easy O&M
Comprehensive tests from components, device to solution

Schematic Diagram

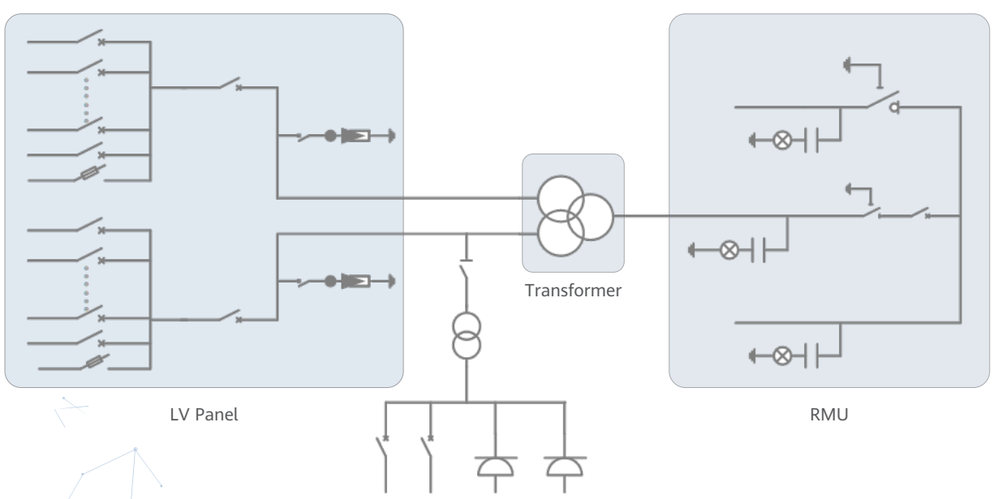

Technical Specifications

Model	JUPITER-9000K-H1	JUPITER-6000K-H1	JUPITER-3000K-H1
Input			
Available Inverters / PCS	SUN2000-330KTL-H1 / SUN2000-330KTL-H2 / LUNA2000-200KTL-H1		
Max. LV AC Inputs	30	22	11
AC Power	9,000 kVA @40°C [1]	6,600 kVA @40°C [1]	3,300 kVA @40°C [1]
Rated Input Voltage	800 V		
LV Panel Segregation	Form 2b		
LV Main Switches	ACB (4,000 A, 2 x 1 pcs)	ACB (2,900 A, 2 x 1 pcs)	ACB (2,900 A, 1 x 1 pcs)
LV Main Switches for Inverters / PCS	MCCB (400 A, 2 x 15 pcs)	MCCB (400 A, 2 x 11 pcs)	MCCB (400 A, 11 pcs)
Output			
Rated Output Voltage	10~35 kV [2]		
Frequency	50 Hz or 60 Hz		
Transformer Type	Oil-immersed, Conservator Type		
Transformer Cooling Type	ONAN		
Transformer Tappings	± 2 x 2.5%		
Transformer Oil Type	Mineral Oil (PCB Free)		
Transformer Vector Group	Dy11-y11	Dy11	
Transformer Min. Peak Efficiency Index	Tier 1 or Tier 2 In Accordance with EN 50588-1		
RMU Type	SF_6 Gas Insulated		
RMU Transformer Protection Unit	MV Vacuum Circuit Breaker Unit		
RMU Cable Incoming / Outgoing Unit	Direct Cable Unit or Cable Load Break Switch Unit		
Auxiliary Transformer	Dry Type Transformer, 5 kVA, Single-phase, li0		
Output Voltage of Auxiliary Transformer	230 / 127 Vac		
Protection			
Transformer Detection & Protection	Oil Level, Oil Temperature, Oil Pressure and Buchholz		
Protection Degree of MV & LV Room	IP 54		
Internal Arcing Fault of STS	IAC A 20 kA 1s		
MV Relay Protection	50/51, 50N/51N		
LV Overvoltage Protection	Type I+II		
Anti-rodent Protection	C5-Medium		
Features			
2 kVA UPS	Optional [3]		
MV Surge Arrester for Transformer	Optional [3]		
General			
Dimensions (W x H x D)	6,058 x 2,896 x 2,438 mm (20' HC ISO Container)		
Weight	< 28 t	< 23 t	< 15 t
Operating Temperature Range	-25°C ~ 60°C [4]		
Relative Humidity	0% ~ 95% (Non-condensing)		
Max. Operating Altitude	1,000 m [5]		
MV-LV AC Connections	Prewired and Pretested, No Internal Cabling Onsite		
LV & MV Room Cooling	Smart Cooling without Air-across for Higher Availability		
Communication	Modbus TCP, Preconfigured with SmartACU2000D		
Standards Compliance			
IEC 62271-202, EN 50588-1, IEC 60076, IEC 62271-200, IEC 61439-1			

1: More detailed AC power of STS, please refer to the de-rating curve.
2: Rated output voltage from 10 kV to 35 kV, more available upon request
3: Extra expense needed for optional features which standard product doesn't contain, more options upon request.
4: When ambient temperature ≥55℃, awning shall be equipped for STS on site by customer.
5: For higher operating altitude, pls consult with Huawei.

JUPITER-9000K-H0 / STS-6000K/3000K-H1
Smart Transformer Station

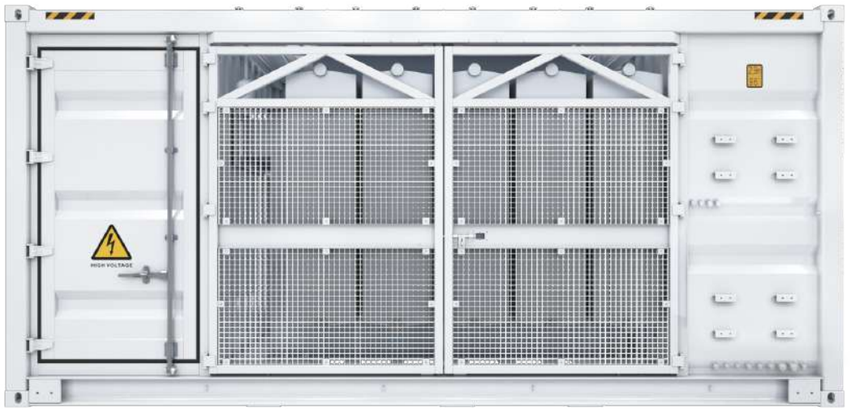

Simple

Prefabricated and pre-tested,
no Internal cabling needed onsite
Compact 20’ HC container design for easy transportation

Efficient

High efficiency transformer for higher yields
Lower self-consumption for higher yields

Smart

Real-time detection of transformer,
LV panel and RMU high precision sensor
of LV electricity parameters
Remote control of ACB and MV circuit breaker

Reliable

Robust design against harsh environments optimal cooling
Design for high availability and easy O&M
Comprehensive tests from components, device to solution

Schematic Diagram

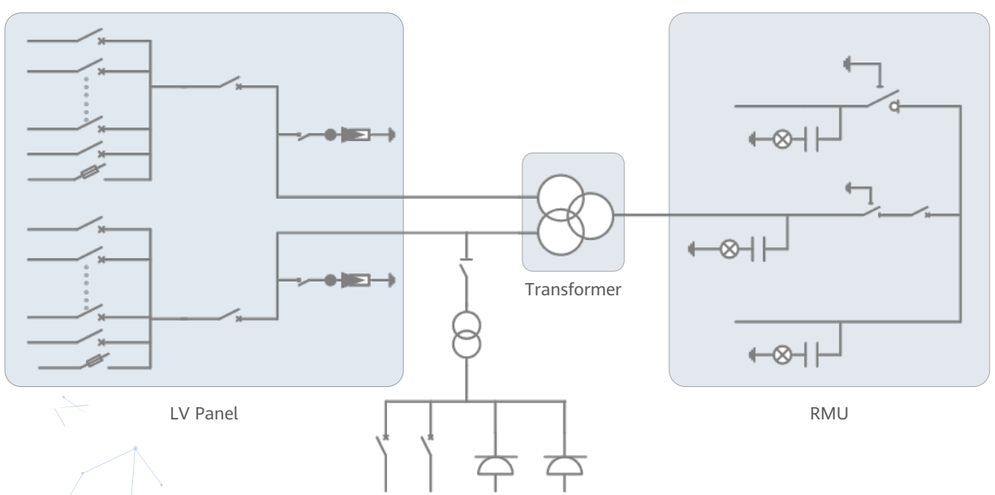

Technical Specifications

Model	JUPITER-9000K-H0	STS-6000K-H1	STS-3000K-H1
Input			
Available Inverters	SUN2000-215KTL-H0 / LUNA2000-200KTL		
Max. LV AC Inputs	44	34	17
AC Power	9,000 kVA @40°C [1]	6,800 kVA @40°C [1]	3,400 kVA @40°C [1]
Rated Input Voltage	800 V		
LV Panel Segregation	Form 2b		
LV Main Switches	ACB (4,000 A, 2 x 1 pcs)	ACB (2,900 A, 2 x 1 pcs)	ACB (2,900 A, 1 pcs)
LV Main Switches for SUN2000-215KTL-H0	MCCB (400 A, 2 x 22 pcs)	MCCB (250 A, 2 x 17 pcs)	MCCB (250 A, 17 pcs)
Output			
Rated Output Voltage	10~35 kV [2]		
Frequency	50 Hz / 60 Hz		
Transformer Type	Oil-immersed, Conservator Type		
Transformer Cooling Type	ONAN		
Transformer Tappings	± 2 x 2.5%		
Transformer Oil Type	Mineral Oil (PCB Free)		
Transformer Vector Group	Dy11-y11	Dy11	
Transformer Min. Peak Efficiency Index	Tier 1 or Tier 2 In Accordance with EN 50588-1		
RMU Type	SF_6 Gas Insulated		
RMU Transformer Protection Unit	MV Vacuum Circuit Breaker Unit		
RMU Cable Incoming / Outgoing Unit	Direct Cable Unit or Cable Load Break Switch Unit		
Auxiliary Transformer	Dry Type Transformer, 5 kVA, Single-phase, li0	Dry Type Transformer, 5 kVA, Three-phase, Dyn11	
Output Voltage of Auxiliary Transformer	230 / 127 Vac	400 / 230 Vac or 220 / 127 Vac	
Protection			
Transformer Detection & Protection	Oil Level, Oil Temperature, Oil Pressure and Buchholz		
Protection Degree of MV & LV Room	IP 54		
Internal Arcing Fault of STS	IAC A 20 kA 1s		
MV Relay Protection	50/51, 50N/51N		
LV Overvoltage Protection	Type I+II		
Anti-rodent Protection	C5-Medium		
Features			
2 kVA UPS	Optional [3]		
MV Surge Arrester for MV VCB	Optional [3]		
General			
Dimensions (W x H x D)	6,058 x 2,896 x 2,438 mm (20’ HC ISO Container)		
Weight	< 28 t	< 22 t	< 15 t
Operating Temperature Range	-25°C ~ 60°C [4]		
Relative Humidity	0% ~ 95% (Non-condensing)		
Max. Operating Altitude	1,000 m [5]		
MV-LV AC Connections	Prewired and Pretested, No Internal Cabling Onsite		
LV & MV Room Cooling	Smart Cooling without Air-across for Higher Availability		
Communication	Modbus TCP, Preconfigured with SmartACU2000D	Modbus RTU, Preconfigured with SmartACU2000D	
Standards Compliance			
IEC 62271-202, EN 50588-1, IEC 60076, IEC 62271-200, IEC 61439-1			

1: More detailed AC power of STS, please refer to the de-rating curve.
2: Rated output voltage from 10 kV to 35 kV, more available upon request
3: Extra expense needed for optional features which standard product doesn’t contain, more options upon request.
4: When ambient temperature ≥55℃, awning shall be equipped for STS on site by customer.
5: For higher operating altitude, pls consult with Huawei.

LUNA2000-213KTL-H0
Smart PCS (Preliminary)

Max. Efficiency 99% | **Modular Design** | **IP66 Protection** | **Built-in Intelligent Active Breaking Device** | **Dual-stage Architecture** | **Smart Grid Forming Algorithm**

Efficiency Curve

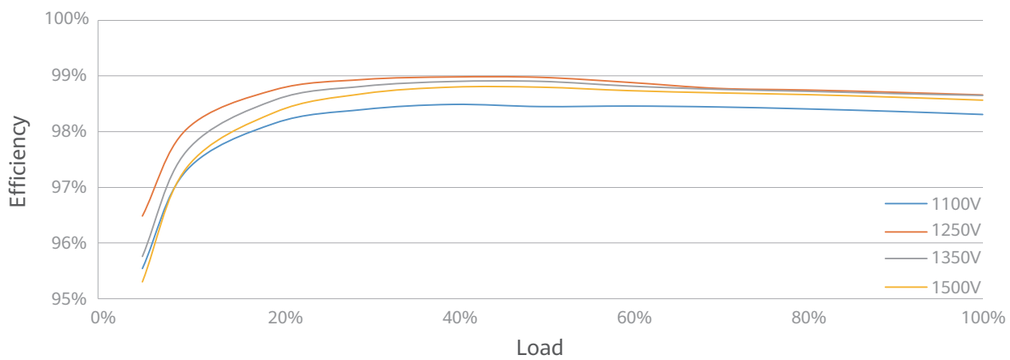

Circuit Diagram

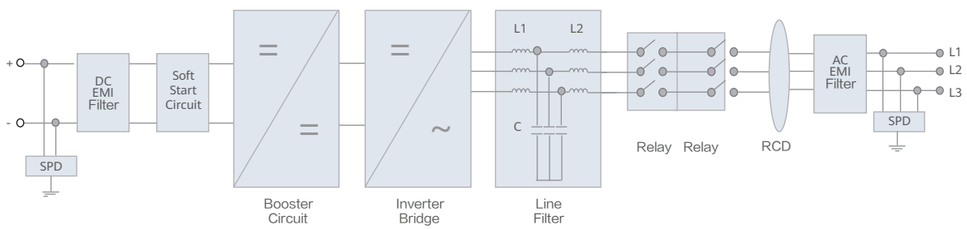

LUNA2000-213KTL-H0

Technical Specifications (Preliminary)

Efficiency	
Max. Efficiency	99.01%
DC Side	
Rated DC Voltage	1,331 V
Max. DC Voltage	1,500 V
Operating DC Voltage Range	800 V ~ 1,500 V
Rated Power Operating Voltage Range	1100V ~ 1500 V
Max. DC Current	218.5 A
Max. Number of Inputs	1
AC Side	
Rated AC Active Power	213,000 W @40°C; 192,000 W @50°C
Max. Apparent Power	236,400 VA
Rated AC Voltage	800 V
Rated AC Grid Frequency	50 Hz / 60 Hz
Max. AC Current	170.6 A
Adjustable Power Factor Range	-1 ... +1
Max. Total Harmonic Distortion	THD_i ≤ 1.5% (Rated)
Protection	
AC Overcurrent Protection	Yes
DC Reverse-polarity Protection	Yes
Insulation Resistance Detection	Yes
Residual Current Protection	Yes
DC Surge Protection	Type II
AC Surge Protection	Type II
Communication	
Display	LED Indicators, WLAN + APP
USB	Yes
Communication Protocol	Ethernet, CAN
General	
Dimension (W x H x D)	875 x 865 x 365 mm
Weight	≤ 110 kg
Operating Temperature Range	-25°C ~ 60°C
Cooling Method	Smart Air Cooling
Max. Operating Altitude without Derating	4,700 m
Relative Humidity	0 ~ 100% (Non-condensing)
DC Connector	OT / DT Terminal
AC Connector	OT / DT Terminal
Protection Degree	IP66
Anti-corrosion Degree	C5-Medium
Topology	Transformerless
Standards Compliance	
GB/T 34120, GB/T 34133, IEC/EN62477-1, etc.	

LUNA2000-4.5MWH-2H1
Smart String Energy Storage System (Preliminary)

Ultra Safety | Native Stability | Higher Revenue | Smart O&M

Technical Specifications

Battery Container	
Model	LUNA2000-4.5MWH-2H1
DC Rated Voltage	1,331.2 V
DC Max. Voltage	1,500 V
Nominal Energy Capacity	4,472 kWh
Charge & Discharge Rate	≤ 0.5 C
Rated Power	2,236 kW
Dimension (W x H x D)	6,058 x 2,896 x 2,438 mm
Weight	≤ 41 t
Operation Temperature Range	-30°C ~ 55°C
Storage Temperature Range	-40°C ~ 60°C
Relative Humidity	0 ~ 100% (Non-condensing)
Max. Operating Altitude	4,700 m
Cooling Method	Liquid Cooling
Fire Suppression System	Water Sprinkler, Novec 1230 (Optional)
Communication Interface	Ethernet / SFP
Communication Protocol	Modbus TCP
Protection Degree	IP55
Anti-corrosion Degree	C5-Medium
Standards Compliance	
RoHS, IEC62477-1, IEC62040-1, IEC61000-6-2, IEC62933-5-2, UL9540A, IEC62619, UN38.3, etc.	
Battery PACK	
Cell Material	LFP
Number of Cell	104
Nominal Capacity	280 Ah / 93.18 kWh
Protection Degree	IP65
Weight	670±10 kg
Dimensions (W x H x D)	785 x 249 x 2182 mm

DTS-200K-D0
Distribution Transformer

Technical Specifications

Electrical	
AC Power	210 kVA@ 400 Vac / 4 kVA@ 110 Vac
Rated Input Voltage	800 Vac
Max. Input Current at Nominal Voltage	151.6 A
Rated Output Voltage	400V (3P) /110V (1P)
Rated Frequency	50 / 60 Hz
Transformer Type	Dry Type
Transformer Cooling Type	AF
Transformer Vectoring Group	Dyn11yn11
Transformer Tappings	± 2 x 2.5%
Transformer Winding	Al
Transformer Insulation Class	H
Transformer Impedance (at 145°C)	4% (±10%) @50Hz / 4.8% (±10%) @60Hz
Transformer No-load Loss	≤ 500 W (+15%)
Transformer Load Loss	≤ 3,044 W (+15%)
Cablings	
Number of outputs	Five MCCBs, each connected to two outputs
Cabling mode	Routed in and out from the bottom
Protection	
Protection Degree	IP 55
LV SPD	Type II
Transformer Protection	Transformer Temperature Protection
Environment	
Operating Temperature Range	- 30°C ~ 55°C
Relative Humidity	0% ~ 95% (Non-condensing)
Max. Operating Altitude	4,000 m
General	
Dimensions (W x H x D)	900 x 2,100 x 1,200 mm
Weight	< 1.3 t
Communication Mode	Dry Contacts
Cooling Type	Smart Cooling without Air-across for Higher Availability
Standards Compliance	
IEC 60076, IEC 61439	

SPPC2000
Smart Power Plant Controller

POC PT/CT Direct Sampling

PV&ESS Synergy

Fast Active/Reactive Power Response

Power Oscillation Damping

Technical Specifications

Model	SPPC2000-A01	SPPC2000-A02
Device Management		
Networking Mode	Active/Standby and Master-Slave Control Mode	
Features		
Active Power Control	System-level 30ms-40ms Dynamic Reactive Power Response	
Frequency Control (P-F)	P-F Curve Control	
Reactive Power Control (Q or PF)	Reactive Power Control with Dynamic or Fixed Q/PF Setpoints	
Voltage Control (Q-U)	Q-U Curve Control	
Smart Reactive Power Compensation	System Level Dynamic Reactive Power Response Based on Inverter/Converter	
Ramp Control (Active and Reactive Power)	Control the Active/Reactive Power Up and Down Ramp Rates	
Cooperative Control of PV and ESS	Yes	
Power Oscillation Damping (POD)	Oscillation Suppression Range (0.1~2.5 Hz)	
Waveform Recording Function	Supports Instantaneous Value (0.5ms) and rms Value Recording of Current and Voltage	
Time Synchronization Function	Supports IRIGB (≤ 1 ms) and Other Time Synchronization Protocols (e.g., NTP)	
Circuit Breaker Status Acquisition and Control	Control Substations Disconnection and Connection	
Simulation Model	PSSE, DigSILENT, PSCAD	
PT/CT Sampling current	1A	5A
Communication Interface		
Ethernet	6 + 2	
Optical Ethernet	SFP x 2, 100 / 1,000 Mbps	
RS485	COM x 4	
Current/Voltage Sampling	6U + 6I	
CAN	2	
Communication Protocol	Modbus-TCP, IEC60870-5-104, GOOSE	
Interaction		
WEB	Yes	
HMI	Smart PV Management System Smart Energy Management System	
General		
Dual Power Supply	AC: 90 V~264 V, 47 Hz ~ 63 Hz, DC: 110 V ± 10%, 220 V ± 10%	
DC/AC Surge Arrester	Type II	
Dimensions (H x L x W)	1000 x 650 x 650 mm (Without Base)	
Weight	≤ 80 kg (Without Pallet and Optional Components)	
Operating Temperature Range	-25°C ~ 60°C	
Relative Humidity	0% ~ 100% (Non-condensing)	
Max. Operating Altitude	4,000 m	
Protection Degree	IP55	
Anti-corrosion Protection	C5-Medium	
Installation Options	Floor Mounting, Wall Mounting (Optional)	

Please confirm the available countries with Huawei Fusionsolar engineers

SmartACU2000D
Smart Array Controller

With SmartPID2000 Module

Without SmartPID2000 Module

Smart
Support one-click commissioning
Patented anti-PID module

Simple
SmartPID2000 & Smartlogger3000B pre-installed with multiple interfaces

Reliable
Industrial-level application and high reliability

Technical Specifications

Model	SmartACU2000D-D-08	SmartACU2000D-D-09	SmartACU2000D-D-10	SmartACU2000D-D-11
Configuration				
SmartLogger	SmartLogger3000B x 1			
SmartModule1000A	Optional		Standard with 1	
RS485	COM x 6, 1,200 / 2,400 / 4,800 / 9,600 / 19,200 / 115,200 bps			
Number of MBUS Module [1]	1	1	2	2
Number of SmartPID2000	0	1	2	2
Switch with 4*SFP and 8*100 / 1,000 Mbps	Optional with 1			Standard with 2
Environment				
Operating Temperature Range	-40°C ~ 60°C			
Relative Humidity	0% ~ 100% (Non-condensing)			
Max. Operating Altitude	4,000 m			
Electrical				
AC Input Voltage for Cabinet	100 V ~ 240 V, L / N (L)+ PE			
AC Input Voltage for MBUS	380 V ~ 800 V, 3Ph			
AC Input Voltage for PID	380 V ~ 800 V, 3Ph + FE (Functional Earth)			
AC Input Frequency	50 Hz / 60 Hz			
Power Supply	Standard: 12 V DC			
Mechanical				
Cable Entries	Bottom in & out			
Maintenance	Front			
Dimensions (W x H x D)	640mm×770mm×365mm	880mm×770mm×369mm		
Weight	33kg	54kg	64kg	66kg
Protection Degree	IP65			
Installation Options	Wall Mounting, Rack Mounting, Pole Mounting			

1: Compatible with communication mode of PLC (Power Line Communication).

SmartLogger3000B

Without SmartModule1000A

With SmartModule1000A

Smart

Connecting up to 200 devices,
One-click commissioning

Simple

Deployment wizard allowed, including
parameters configuration, devices connection

Reliable

Safety improvement
by lightning protection module

Technical Specifications

Model	SmartLogger3000B	SmartLogger3000B with SmartModule1000A
Device Management		
Max. Manageable Devices	200	
Max. Manageable Smart String Inverters [1]	150	
Max. Manageable Smart PCS / Smart String ESS [1]	44 / 24	
Communication Interface		
WAN	WAN x 1, 10 / 100 / 1,000 Mbps	
LAN	LAN x 1, 10 / 100 / 1,000 Mbps	LAN x 3, 10 / 100 / 1,000 Mbps
Optical Ethernet	SFP x 2, 100 / 1,000 Mbps	
MBUS	MBUS x 1, 115.2 kbps, Compatible with PLC	
RS485	COM x 3	COM x 6
Digital / Analog Input / Output	DI x 4, DO x 2, AI x 4	DI x 8, DO x 2, AI x 7
PT100 / PT1000	0	2
Active DO	12 V, 100 mA (connection with relay, sensor)	
Communication Protocol		
Ethernet	Modbus-TCP, IEC 60870-5-104	
RS485	Modbus-RTU, IEC 60870-5-103 (standard), DL / T645	
Interaction		
LED	LED Indicator x 3	LED Indicator x 5
WEB	Embedded Web	
USB	USB 2.0 x 1	
APP	Communication by WLAN for commissioning	
Environment		
Operating Temperature Range	-40°C ~ 60°C	
Storage Temperature Range	-40°C ~ 70°C	
Relative Humidity	5% ~ 95% (Non-condensing)	
Max. Operating Altitude	4,000 m	
Electrical		
Power Adapter	AC input: 100 V～240 V, 50 Hz / 60 Hz; DC output: 12 V, 2 A	
DC Power Supply	24 V, 0.8 A	
Power Consumption	Typical 9 W, Max. 15 W	Typical 10 W, Max. 18 W
Mechanical		
Dimensions (W x H x D, without mounting ears)	225 x 160 x 44 mm	350 x 160 x 44 mm
Weight	2 kg	3 kg
Protection Degree	IP20	
Installation Options	Wall Mounting, DIN Rail Mounting, Tabletop Mounting	

1: One smartlogger supports max. manageable devices for either smart string inverter or Smart string ESS in one power block

Grid Networking Architecture

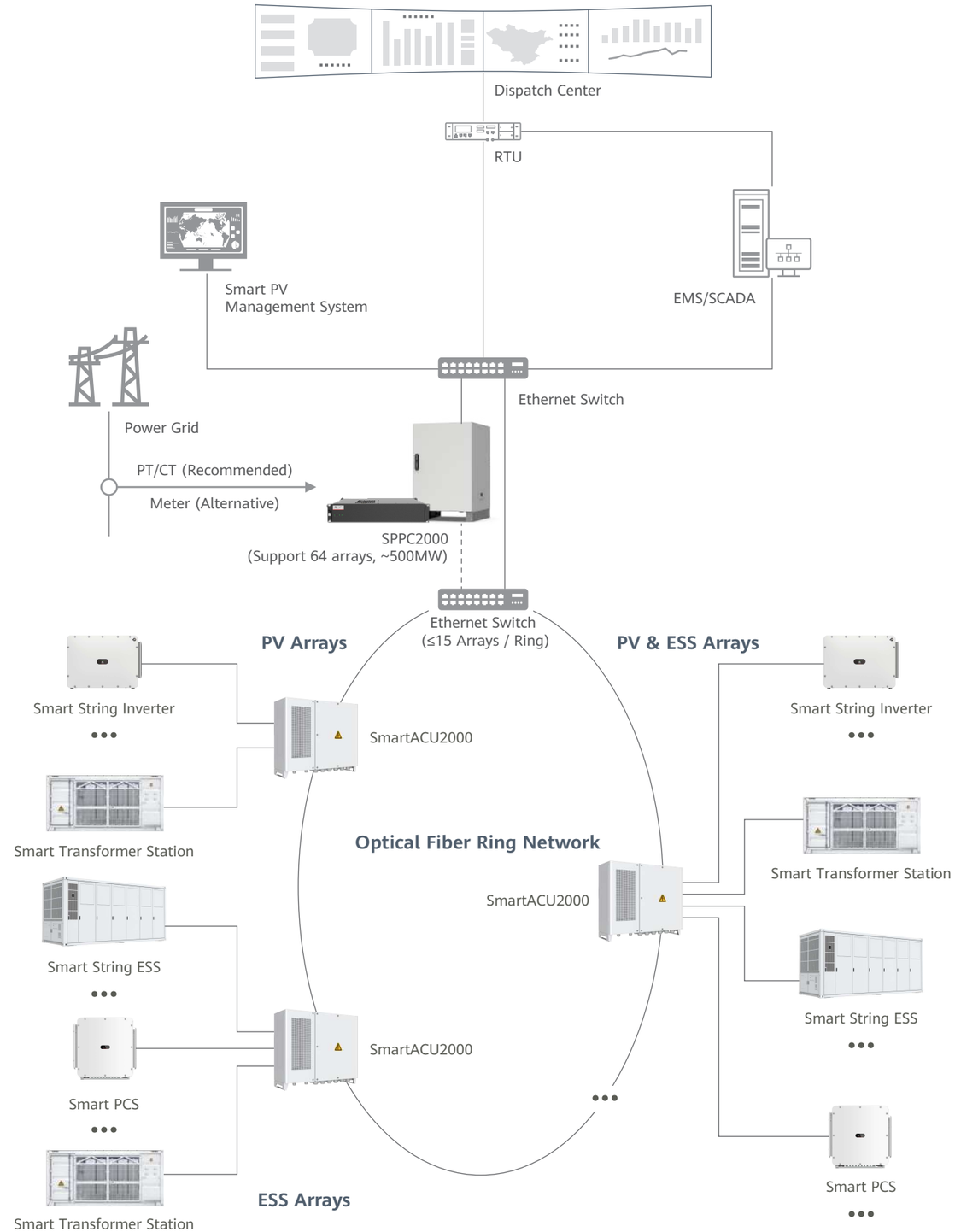

*For details about the project configuration and sales area, contact Huawei engineers.
SPPC does not support the PV & ESS low-voltage AC coupling solution.

SEMS2000
Smart Energy Management System (Preliminary)

Comprehensive management

Multi-level refined management
Second-level performance curve drawing

Efficient collaboration

Power generation plan curve
PV&ESS synergy optimization

Intelligent diagnosis

Full-link multi-dimensional plant diagnosis
Cell/module fault pre-warning

Secure and reliable

IEC62443 certification.
99.99% availability

Technical Specifications

Parameter Description			
EMS cabinet			
W x D x H	600mm×2200mm×1200mm (47u)	Weight	Net weight approx. 210 kg, full configuration approx. 600 kg
Temperature	5 - 30°C	Power Supply	200V~240V, 50/60Hz
Protection Grade	IP20	Altitude	≤4000m
Server			
Model	TaiShan 200 (2280)	Hard Disk	8*1.92T SATA SSD
W x D x H	482.6mm*790mm*88.9mm. (2U)	Fans	Four hot-swappable fans in N+1 redundancy
CPU	2*Kunpeng 920 - 48core @2.6GHz	External Interface	8*GE
Database	GaussDB	Power supply	2 x 900 W, 1+1 Redundancy
Operating system	EulerOS	Net weight	Approx. 30 kg
Memory	4*64G	Certification	CCC/CE, etc.

Switches		
Model	CloudEngine S5735-S24ST4XE-V2	CloudEngine S5735-S24T4XE-V2
W x D x H	420mm*442mm*43.6mm (1U)	420mm*442mm*43.6mm (1U)
Net Weight	4.95 kg	4.34 kg
Memory	2GB	2GB
Power Supply	2*180W, 1+1 redundancy	2*180W, 1+1 redundancy
Interface	Eight gigabit electrical ports, four 10GE optical ports, and 24 gigabit optical ports	24 GE electrical ports and 4 10GE optical ports
Rated Voltage	100V AC~240V AC; 50/60Hz	100V AC~240V AC; 50/60Hz
Certification	CE/VCCI, etc.	CE/VCCI, etc.

*EMS will be available in Q1.25

Smart PV Plant Management System

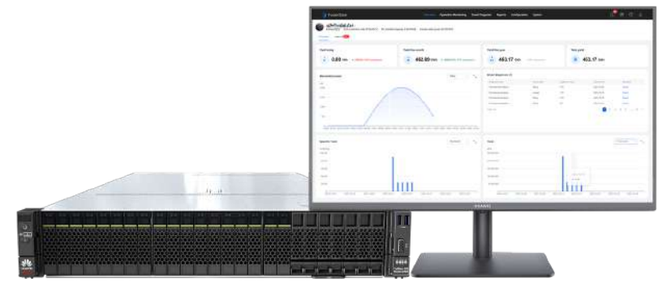

Refined Management

Efficient O&M

Compatible with 3rd party system

Network

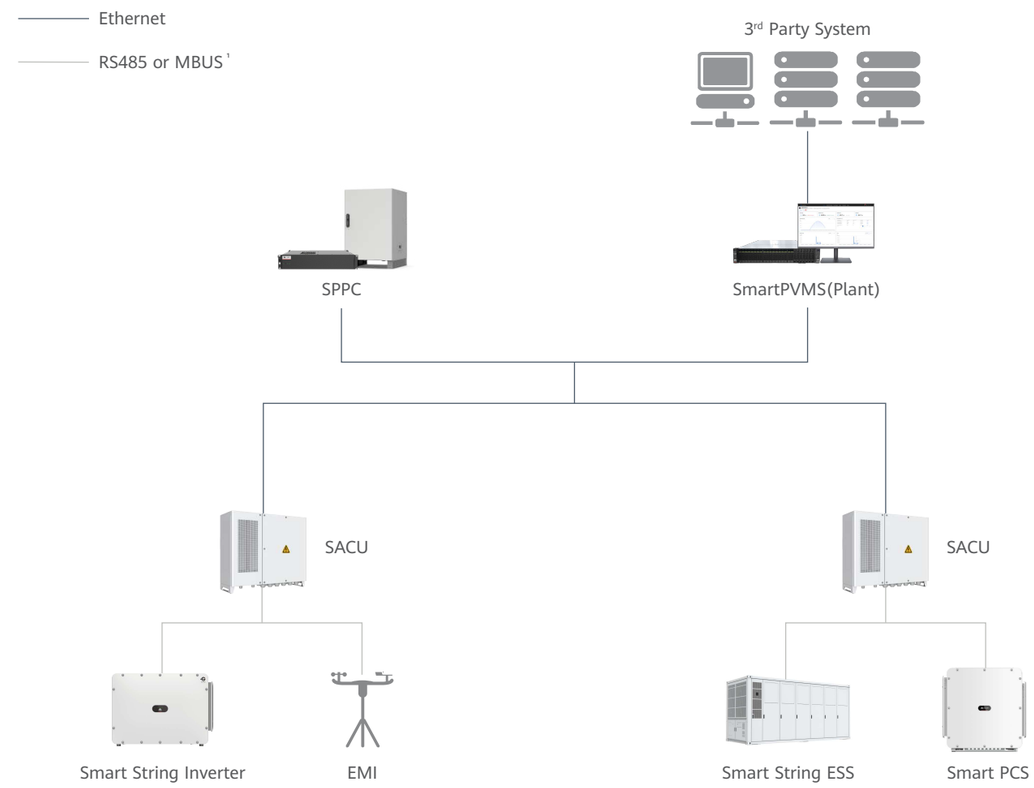

1 - Compatible with communication mode of PLC (Power Line Communication).

Smart PV Plant Management System

Main Functions

Function		Description
Refined management	Plant Overview	Provide an overview of the key information of the PV & ESS plant.
	Multi-level Refined Management	Provide multi-level fine management of plants, arrays, equipment, and components (strings, batteries)...
	Alarm Management	Alarms can be filtered, graded, and redefined; One-click direct access to the alarm center from any interface throughout the system.
	Remote Device Upgrade	Batch device upgrade through SmartPVMS(Plant) without going on-site.
Efficient O&M	Plant Diagnosis	Comprehensively evaluates plant performance and alarms, and analyze the loss.
	Power Normalization	Intelligently analyze plant and array operation efficiency and identify inefficient arrays.
	Discreteness Analysis	Inverter/string discreteness and deviation rate analysis, identifying inefficient strings; linked to Smart IV Curve Diagnosis automatically for further inspection.
	Smart IV Curve Diagnosis	Realize string-level fault localization, provide diagnosis report, O&M report, revenue estimation report, etc.
	Smart Tracker Control Algorithm (SDS)	Intelligent adjustment of the angle of the tracker to reduce shading and improve power generation efficiency
Open Eco-system		Data can transfer via northbound IEC104 and Restful API.

Server Parameters

Item	Standard Version	Premium Version
Model	TaiShan200 2280	TaiShan200 2280
Form Factor	2U rack server	2U rack server
CPU	2*Kunpeng 920-48core@2.6GHz	2xKunpeng 920-48core@2.6GHz
Memory	2*32GB	4*32GB
Internal Storage	2*1920GB	18*1920GB
Operating System	Euler OS	Euler OS
Database	Gauss DB	Gauss DB
Network Ports	8*GE	8*GE
Power Supply	22 hot-swappable PSUs, 1+1 redundancy	2 hot-swappable PSUs, 1+1 redundancy
Voltage	110/220 Vac	
Fan Modules	4 hot-swappable fan modules, N+1 redundancy	4 hot-swappable fan modules, N+1 redundancy
Operating Temperature	5°C ~ 40°C	5°C ~ 40°C
Dimensions (H x W x D)	86.1 x 447 x 790 mm	86.1 x 447 x 790 mm
Weight	27 kg	28 kg
Certification	CCC CQC RCM VCCI FCC&IC-SDoC CE-SDoC CB+NRTL, etc.	CCC CQC RCM VCCI FCC&IC-SDoC CE-SDoC CB+NRTL, etc.

Smart I-V Curve Diagnosis

Smart I-V Curve Diagnosis is able to carry out online I-V curve analysis on entire strings with advanced diagnosis algorithm. The scanning would help to find out and identify the strings with low performance or malfunction, which would help to achieve proactive maintenance, higher O&M efficiency and lower operation cost.

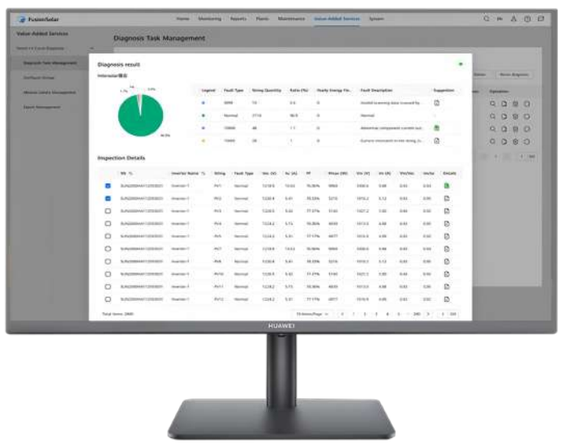

Smart

- Support plant-level, array-level and inverter-level analysis and diagnosis
- Support scheduled scanning and proactive presentation of reports
- Automatically identify different failure types and provide recovery suggestion
- Support export of ROI estimation reports and assist in accurate O&M

Efficient

- One-click scanning without onsite experts or equipment
- SCompleting online I-V curve scanning on all strings
- Identification rate, recurrence rate, cause Identification accuracy > 95%

Network Structure

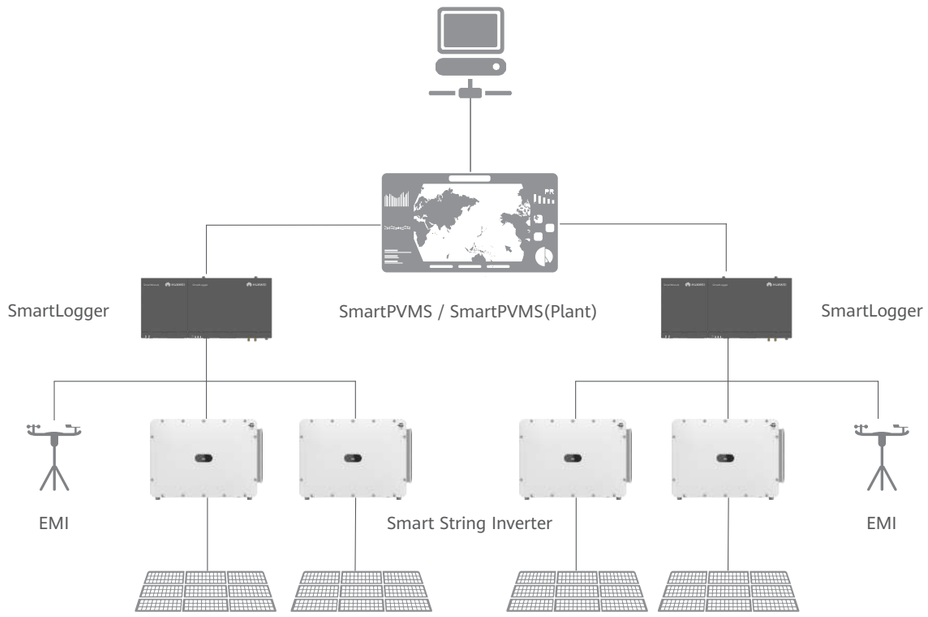

Smart I-V Curve Diagnosis

Technical Specifications	
Smart String Inverter	SUN2000-330KTL-H1, SUN2000-330KTL-H2, SUN2000-215KTL-H0...
Data Logger	SmartLogger3000
SmartPVMS, SmartPVMS(Plant)	SmartPVMS, SmartPVMS(Plant)
Sampling Points per I-V Curve	128
Voltage Accuracy	0.5%rdg. + 1dgt. (rdg.>5, dgt.= 0.3)
Current Accuracy	0.5%rdg. + 2dgt. (rdg.>0.3, dgt.= 0.006)
	Smart I-V Curve Diagnosis Verified by TÜV

String-level Management	Smart I-V Curve Diagnosis
	
Real Time Detection	Fault Analysis

String I-V Curve Comparison

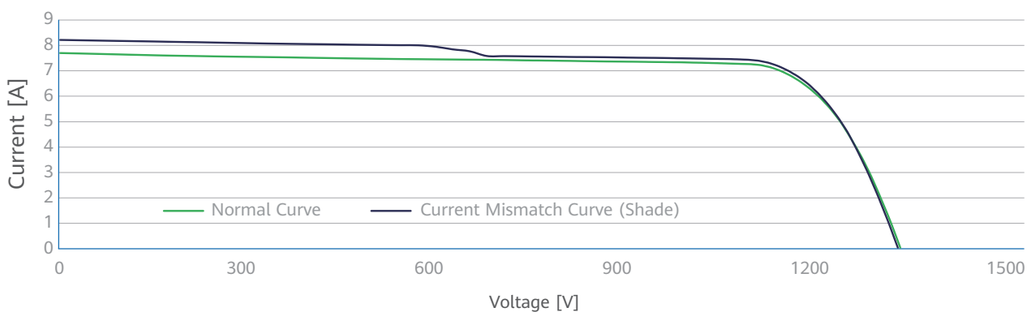

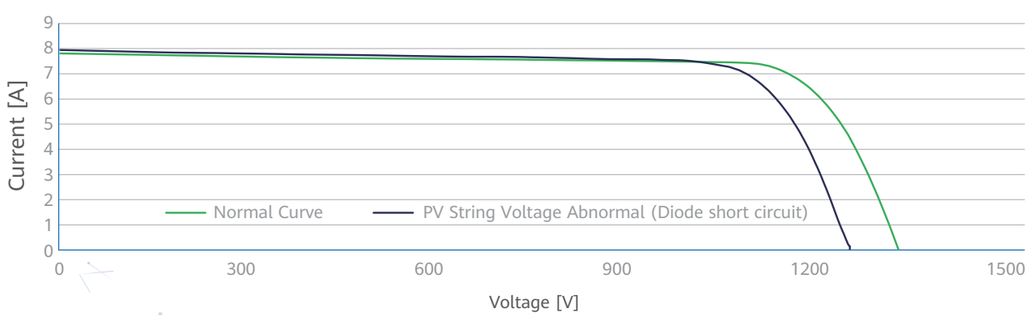

Smart Tracker Control Algorithm (SDS)

Smart Tracker Control Algorithm (SDS) is a valuable software based and closed-loop control. By using the SDS, together with Smart PVMS, SmartLogger and SUN2000 inverters, the trackers' angle can be automatically controlled and optimally adjusted to achieve higher yields. The yields can be increased by ~1% especially in complex terrain and weather scenarios, and it will bring higher revenue to the customer.

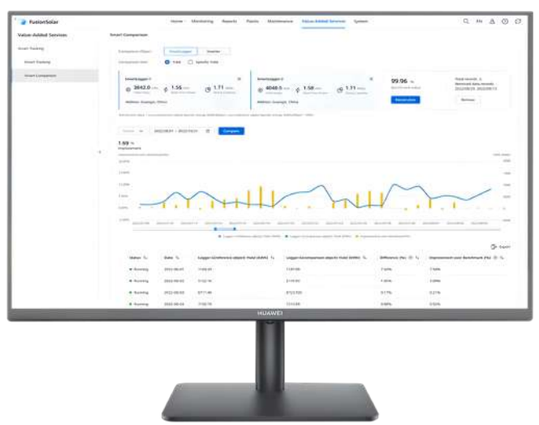

System level closed-loop control to keep the system operating in the state of maximum irradiation and optimal power output of PV module

Automatic tracking angle optimization and control by using AI technology, automatic sensing of shading and weather information. No need for additional sensing equipment, free from manual and empirical dependence

Network Structure

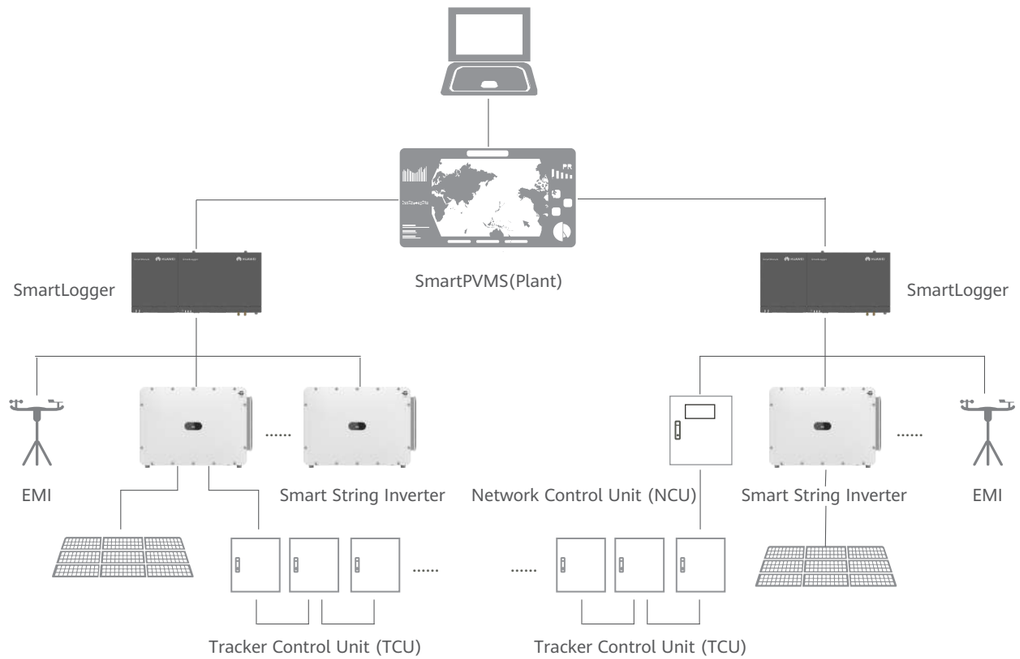

Smart Tracker Control Algorithm (SDS)

Technical Specifications	
Smart String Inverter	SUN2000-215KTL-H0, SUN2000-215KTL-H3...
Data Logger	SmartLogger3000 series...
Management System	SmartPVMS(Plant)
Tracking Angle Accuracy	0.5°
Smart Tracker Control Algorithm Verified by TÜV	

Comparison of Tracker Algorithms and Angles

Reverse-tracking stage in the morning and at dusk	
Shadows in the front and back rows of modules, without consideration of complex terrain.	The SDS algorithm allows trackers to find the optimal angle for each, effectively avoiding shadow occlusions.

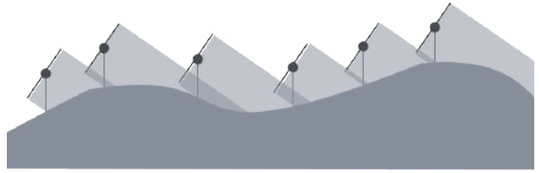

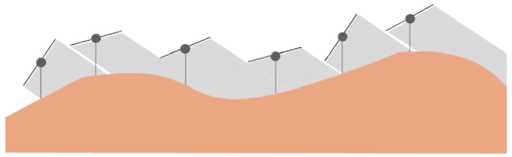

Traditional Tracker Algorithm	Smart Tracker Control Algorithm

Cloudy and rainy days	
Tracking the angle of the sun is not the best way to get maximum irradiation when without consideration that direct sunlight becomes diffuse reflection in this scenario.	Trackers are flattened at a small angle to receive more diffuse light, so as to get maximum irradiation.

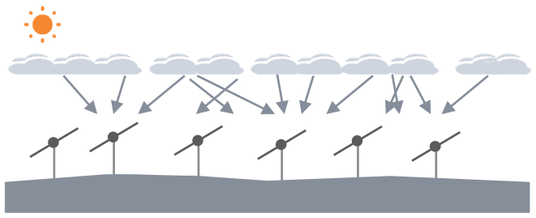

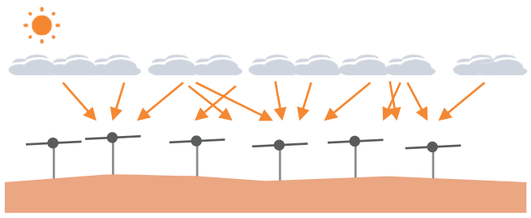

Traditional Tracker Algorithm	Smart Tracker Control Algorithm

Success Stories

400MW PV + 1.3GWh BESS Project in New City of Red Sea, Saudi Arabia

World's Largest Microgrid BESS Project

- A green city powered by 100% renewable energy
- Grid friendly: continuous high- and low-voltage ride-through, grid-wide black start, and high PV-to-ESS ratio
- Simple installation and O&M: Pre-fabricated before transportation, eliminating the need for internal installation and cable connection onsite and the need for manual SOC calibration

COD:
Dec, 2023
Location:
Saudi Arabia

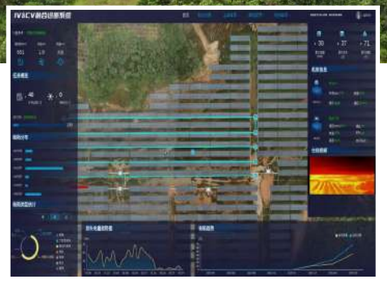

Datang's 260MW Floating PV Plant in Jiangxi, China

World's First Plant Using the Smart Co-Diagnosis System

- After the Smart Co-Diagnosis System identifies faults and provides troubleshooting suggestions, the array energy yield increases by 1%–2%.
- Within 5 months after the system is deployed, the average O&M efficiency is improved by about 80%.
- Smart I-V Curve Diagnosis + Drone Inspection

COD:
Dec, 2020
Location:
Jiangxi, China

Success Stories

Yalong River Hydropower's 1GW Kola PV Plant (Phase I)

World's Largest Hydro&PV Complementary Plant

- Digital planning, construction, maintenance, and operation innovation
- Located in the Yalong River basin at an altitude of 4000–4600 meters
- Annual energy yield: 2 billion kWh
- Reduces carbon emissions by 1.6 million tons per year

COD:
Jun, 2023
Location:
Sichuan, China

China Resources Power & CGDG's 100MWh Energy Storage Projects

World's First batch of 100MWh Smart String Grid Forming Energy Storage Plants

- 3x reactive current support and inertia support, primary frequency regulation, and enhanced grid inertia damping characteristics in weak grids
- Renewable energy plants can be connected to weak grids on a large scale

COD:
Jan-May, 2024
Location:
Xinjiang/Qinghai, China

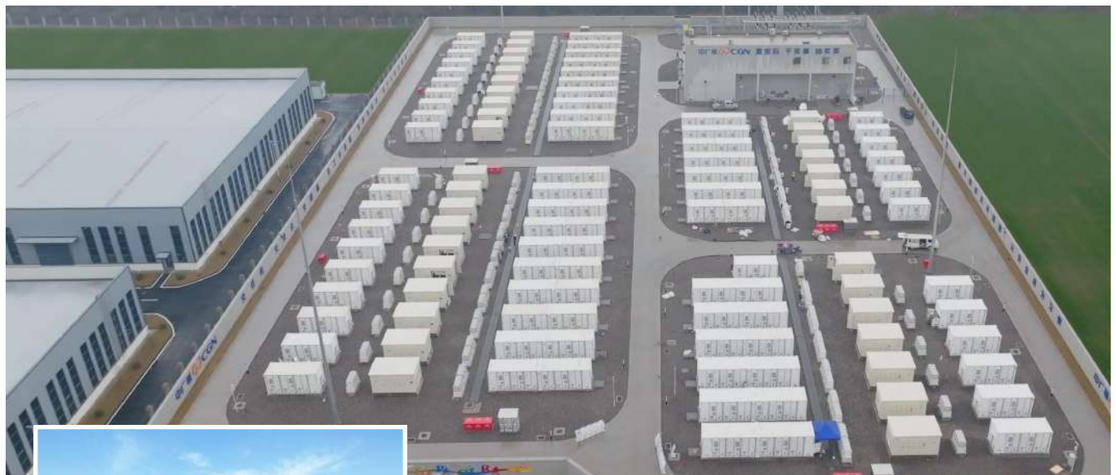

China General Nuclear Power's 100MW/200MWh Energy Storage Plant

China's Largest Plant That Uses Smart String ESS

- Technological innovation of "string ESS + cloud BMS"
- Hybrid business model of "TOU + leasing"
- Intelligent active safety of ESS

COD:
Dec, 2022
Location:
Hubei, China

Tongwei's 200MW Fishery & PV Integration Project in Hubei, China

Safe, Stable and Efficient Operations in Complex Fishery-Solar Scenarios

- SSLD + SCLD, ensuring safety on the DC side
- Smart fan dust removal, remote O&M in complex scenarios, improving efficiency
- IP66 + C5-M anti-corrosion, reliable operations in high humidity environments

COD:
Dec, 2022
Location:
Hubei, China

Success Stories

Datang's 100MW PV + 25MW/50MWh BESS Agrivoltaic Project in Hainan, China

Hainan Province's First Large-Scale Project with Smart String Inverters & String ESS

- Supplies more than 174 million kWh of clean energy each year.
- Constructs a clean energy island and revitalizes rural areas in Hainan, helping achieve the dual-carbon goals.

COD:
Apr, 2022
Location:
Hainan, China

Sembcorp's 285MWh BESS Project in Singapore*

Spinning Reserve, Frequency Regulation

- Rack-level management, longer-lasting constant-power output, and higher frequency regulation benefits
- Automatic SOC calibration, slashing O&M costs
- Safe and reliable; compliant with local strict standards, CoC fire protection requirements

*Huawei accounts for 50%

COD:
Nov, 2022
Location:
Singapore